STANDARDS TEST FIXTURE

Flatwise Tensile Adhesion Fixture

Tensile fixtures for tension perpendicular to surface of panels, boards and tile adhesives



OVERVIEW

Tensile fixtures for testing tension and tensile adhesion perpendicular to the surface of sandwich cores, wood-based panels, insulation boards and tile adhesives. The specimen is bonded between two insert blocks held in anodized aluminum carriers, and cardan adapters keep the load axial so the specimen fails in pure tension. Interchangeable inserts cover ASTM C297, ASTM D1623, EN 319, EN 1607 and EN 12004.

KEY FEATURES

- One carrier pair covers seven standards with interchangeable inserts
- Cardan adapters ensure axial, bending-free loading
- Insert blocks 25.4, 50, 50.8 and 100 mm square
- Anodized aluminum carriers and inserts, rated to 20 kN
- Nickel-plated steel cardan adapters included with each carrier pair
- Clevis coupling Ø 15.9 mm or Ø 20 mm

TECHNICAL SPECIFICATIONS

Max. load	20 kN
Test type	Flatwise tension / tensile adhesion
Insert surface	25.4 × 25.4, 50 × 50, 50.8 × 50.8 or 100 x 100 mm
Material	Carriers and inserts: aluminum, anodized; cardan: steel, nickel-plated
Coupling	Female clevis Ø 15.9 mm (5/8 in) or Ø 20 mm; others via adapter
Temperature range	0 to +70 °C
Weight	Carriers 1.37 or 1.84 kg; inserts 0.25–0.84 kg each
Scope of supply	1 pair of carriers incl. cardan adapter(s); inserts separate

AVAILABLE VERSIONS

Carriers, ASTM D1037 / EN 12004	1 pair with 1 cardan adapter
Carriers, all standards	1 pair with 2 cardan adapters
Inserts 25.4 × 25.4 mm	ASTM C297, ASTM D1623 Type B
Inserts 50 × 50 mm	DIN 52365, EN 319, EN 1607, EN 12004
Inserts 50.8 × 50.8 mm	ASTM C297, ASTM D1037 Fig. 8
Inserts 100 × 100 mm	EN 1607

APPLICATIONS

- Sandwich panel cores
- Particleboard and MDF
- Thermal insulation boards
- Ceramic tile adhesives

STANDARDS ASTM C297, ASTM D1623, ASTM D1037, DIN 52365, EN 319, EN 1607, EN 12004

Ordering & customization: Specify carrier version, the insert sizes for the standards to be run, and machine coupling.

Dimensional drawings
See page 2. Certified drawings and 3D models available on request.

Specifications are typical and may vary by configuration; confirm at time of quote. Custom versions, couplings and adapters available on request. Part ref. UGC-ST-750

UGC-ST-750

Flatwise Tensile Adhesion Fixture

DIMENSIONAL DRAWINGS

FIG. 1

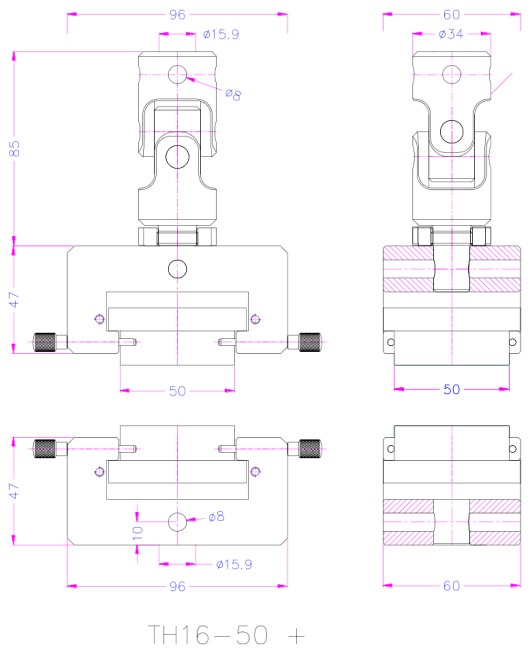

FIG. 2

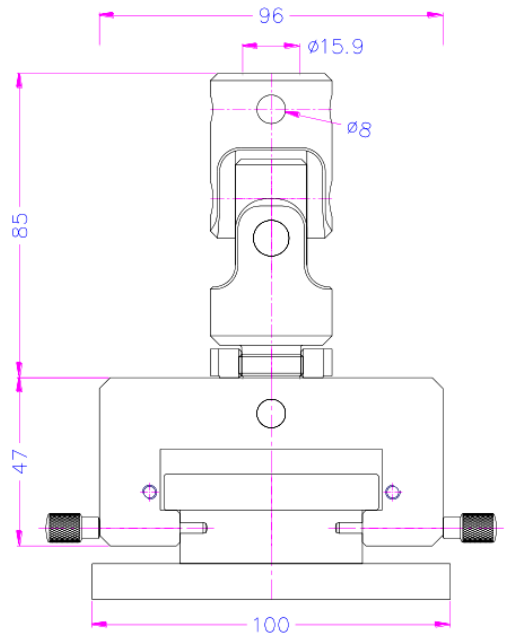

FIG. 3

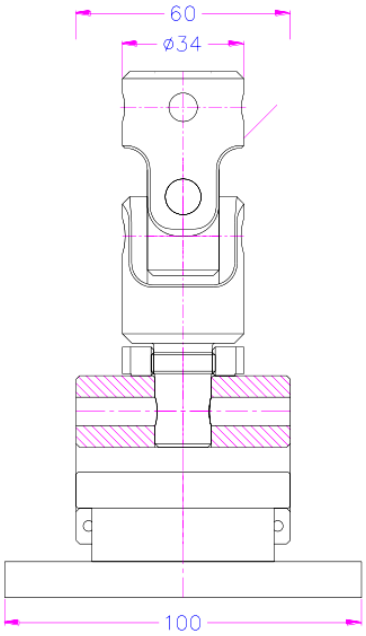

FIG. 4

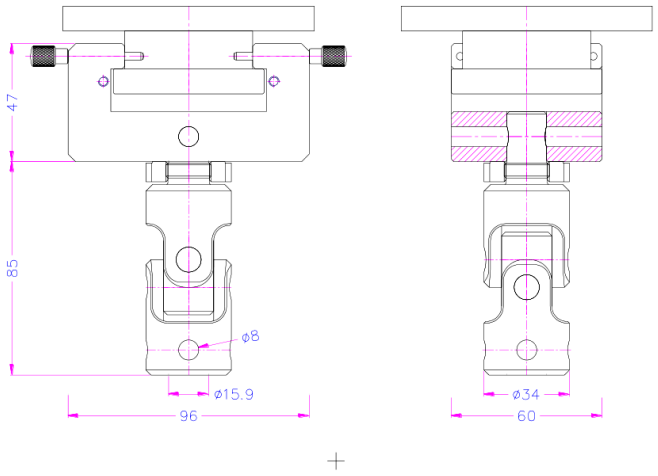

Dimensions in mm. Drawings are representative of the product family and may show optional versions or accessories; dimensions are for reference only and may change without notice. Certified dimensional drawings and 3D models are available on request.