STANDARDS TEST FIXTURE

Nail Shank Tear Fixture EN 12310-1

Stirrup fixture for nail shank tear resistance of bitumen roofing sheets

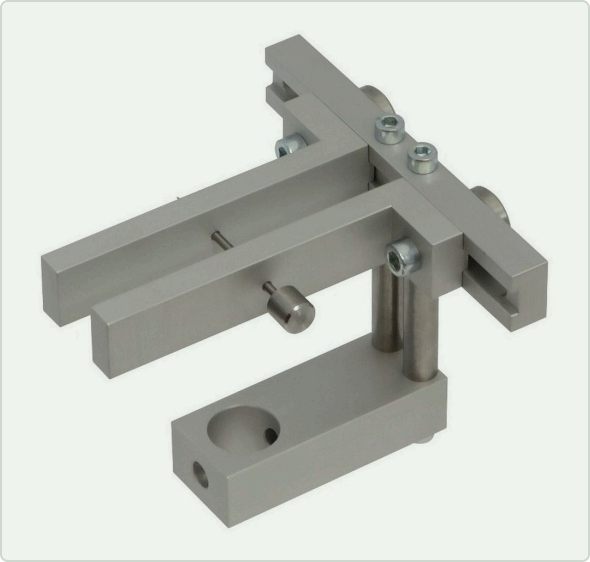

OVERVIEW

Fixture for determining the nail shank tear resistance of bitumen roof waterproofing sheets according to EN 12310-1. The specimen is placed between the arms of a stirrup and pinned by a sharpened nail shank 50 ± 5 mm from its end; the free end is gripped above and the force to tear the sheet towards its end is measured.

KEY FEATURES

- Stirrup with locating holes for the nail shank per EN 12310-1
- Hardened, nickel-plated steel nail shank with stainless handle
- Specimen opening 0–60 mm for thick bitumen membranes
- Lightweight anodized aluminum body weighing only 0.46 kg
- Rated to 2 kN tensile load
- Clevis coupling Ø 15.9 mm or Ø 20 mm

TECHNICAL SPECIFICATIONS

Max. load	2 kN
Test type	Tear resistance (nail shank), tension
Opening	0–60 mm
Body	Aluminum, anodized
Nail shank	Steel, hardened, nickel-plated; handle stainless steel
Coupling	Female clevis Ø 15.9 mm (5/8 in) or Ø 20 mm; others via adapter
Temperature range	0 to +70 °C; others on request
Weight	0.46 kg
Scope of supply	1 fixture incl. nail shank; upper grip not included

APPLICATIONS

- Bitumen roofing membranes
- Waterproofing sheet production QC
- Building products certification
- Plastic and rubber sheets

STANDARDS EN 12310-1

Ordering & customization: Specify machine coupling and upper grip; a pneumatic grip with wave jaws and 40 × 100 mm clamping surface is recommended.

Dimensional drawings
See page 2. Certified drawings and 3D models available on request.

Specifications are typical and may vary by configuration; confirm at time of quote. Custom versions, couplings and adapters available on request. Part ref. UGC-ST-670

Nail Shank Tear Fixture EN 12310-1

DIMENSIONAL DRAWINGS

FIG. 1

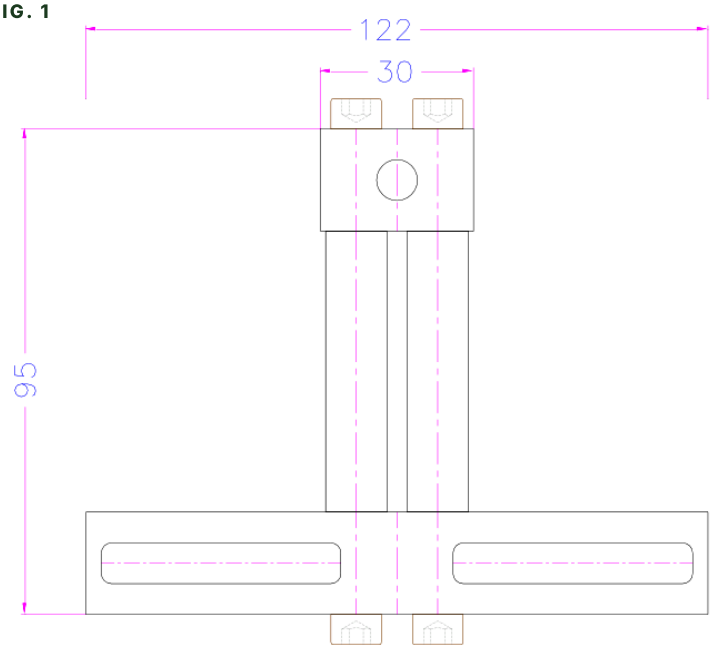

FIG. 2

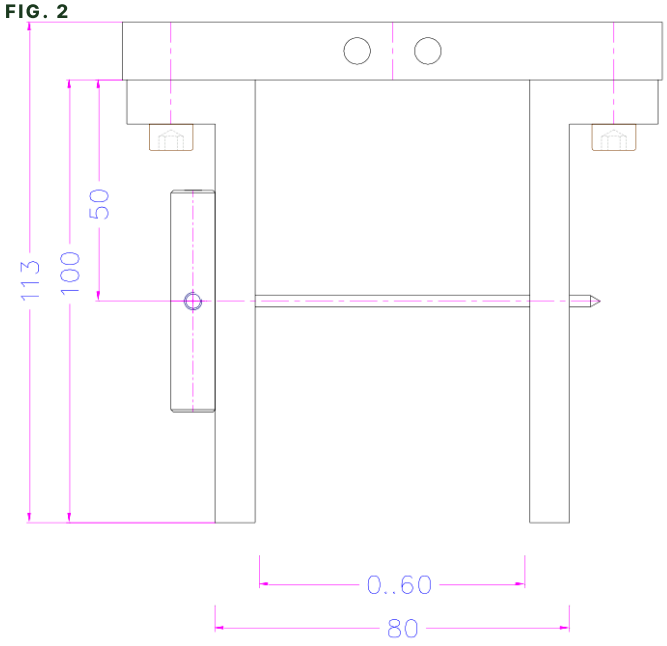

FIG. 3

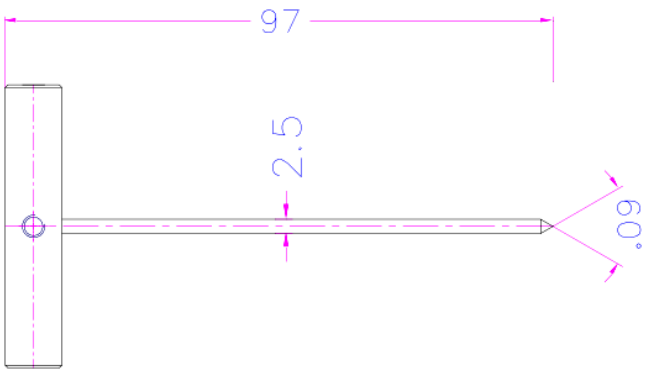

Dimensions in mm. Drawings are representative of the product family and may show optional versions or accessories; dimensions are for reference only and may change without notice. Certified dimensional drawings and 3D models are available on request.