STANDARDS TEST FIXTURE

Celanese Compression Fixture EN 2850

Celanese compression fixture for fiber-reinforced plastics to EN 2850 Type A and ISO 14126



OVERVIEW

Celanese compression test fixture for fiber-reinforced plastic composites according to EN 2850 Type A, ISO 14126 Method A and DIN 65380. Tapered collets with pyramid-serrated 63 × 50 mm jaws grip the specimen ends and load it through shear, while the fixture sits between compression platens. Hardened, nickel-plated steel, usable from -70 to +250 °C.

KEY FEATURES

- Designed for Celanese compression tests to EN 2850 Type A
- Also covers ISO 14126 Method A and DIN 65380
- Pyramid-serrated jaws, 63 × 50 mm, grip the specimen ends
- Hardened, nickel-plated steel construction, 4.5 kg
- Wide temperature range from -70 to +250 °C
- Fixture is used between standard upper and lower compression platens

TECHNICAL SPECIFICATIONS

Test type	Compression (shear-loaded)
Standards	EN 2850 Type A, ISO 14126 Method A, DIN 65380
Jaws	63 × 50 mm (H x W), pyramid serrated
Material	Steel, hardened, nickel-plated
Temperature range	-70 … +250 °C; other ranges on request
Weight	4.5 kg
Max. load	On request
Scope of supply	1 fixture; compression platens ordered separately

APPLICATIONS

- Aerospace composite qualification
- Carbon and glass fiber laminates
- Composite materials research
- Elevated-temperature compression tests

STANDARDS EN 2850, ISO 14126, DIN 65380, ASTM D3410

Ordering & customization: Specify test temperature and order compression platens (Ø 116 mm hardened steel recommended) if not already available.

Dimensional drawings
See page 2. Certified drawings and 3D models available on request.

Specifications are typical and may vary by configuration; confirm at time of quote. Custom versions, couplings and adapters available on request. Part ref. UGC-ST-550

Celanese Compression Fixture EN 2850

DIMENSIONAL DRAWINGS

FIG. 1

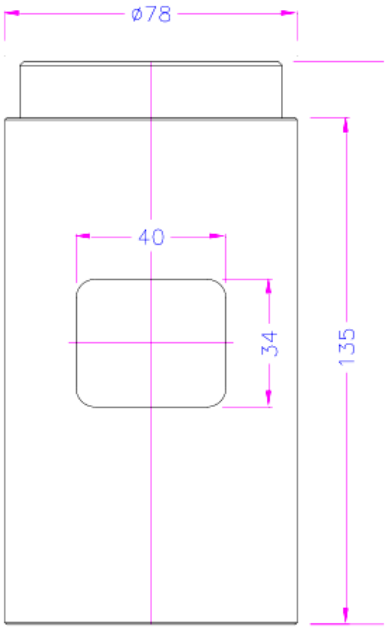

FIG. 2

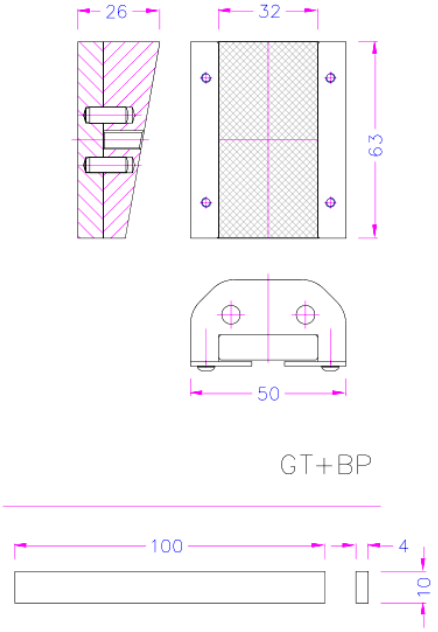

FIG. 3

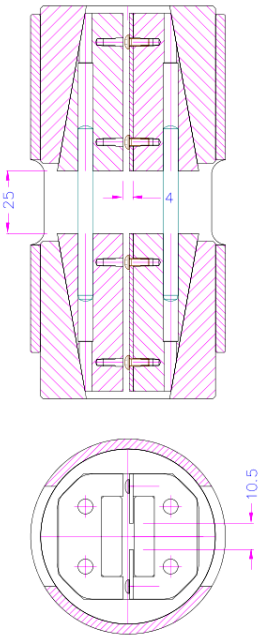

FIG. 4

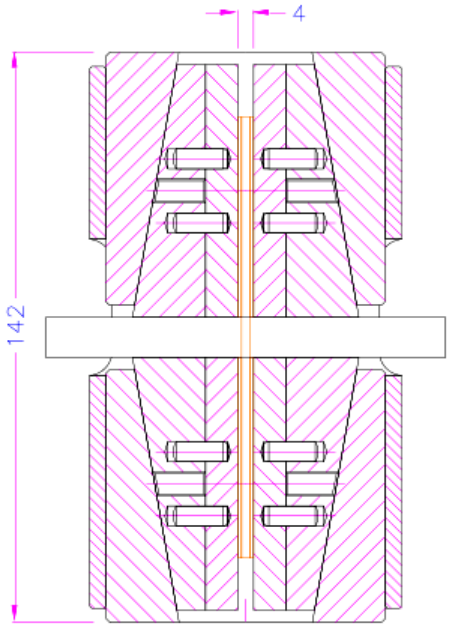

Dimensions in mm. Drawings are representative of the product family and may show optional versions or accessories; dimensions are for reference only and may change without notice. Certified dimensional drawings and 3D models are available on request.