STANDARDS TEST FIXTURE

Low Heel Bond Strength Grips GOST 9136

Needle-pin grips for bond strength tests on low shoe heels to GOST 9136



OVERVIEW

Pair of grips for testing the bond strength of low heels according to GOST 9136, Fig. 1. Each grip has a rectangular frame with pivoting clamping plates fitted with rows of needle pins, closed by side screws, so the heel and the shoe bottom are held firmly. The testing machine then pulls the heel off the shoe.

KEY FEATURES

- Designed for low heel bond tests according to GOST 9136, Fig. 1
- Needle-pin clamping plates penetrate and hold heel and sole
- Side screws adjust the clamping plates to the specimen
- Pivoting plates align with the heel geometry
- Upper and lower grips supplied as a matched pair
- Clevis pin connection to the testing machine

TECHNICAL SPECIFICATIONS

Test type	Tensile, heel bond strength
Standard	GOST 9136, Fig. 1
Specimen	Shoes with low heels
Clamping	Needle-pin plates, screw adjusted
Scope of supply	1 pair of grips
Max. load	On request
Coupling	On request
Material	On request

APPLICATIONS

- Footwear manufacturing QC
- Heel attachment testing
- Shoe repair materials
- Footwear laboratories

STANDARDS GOST 9136

Ordering & customization: Specify heel dimensions and the machine coupling.

Dimensional drawings
See page 2. Certified drawings and 3D models available on request.

Specifications are typical and may vary by configuration; confirm at time of quote. Custom versions, couplings and adapters available on request. Part ref. UGC-ST-360

Low Heel Bond Strength Grips GOST 9136

DIMENSIONAL DRAWINGS

FIG. 1

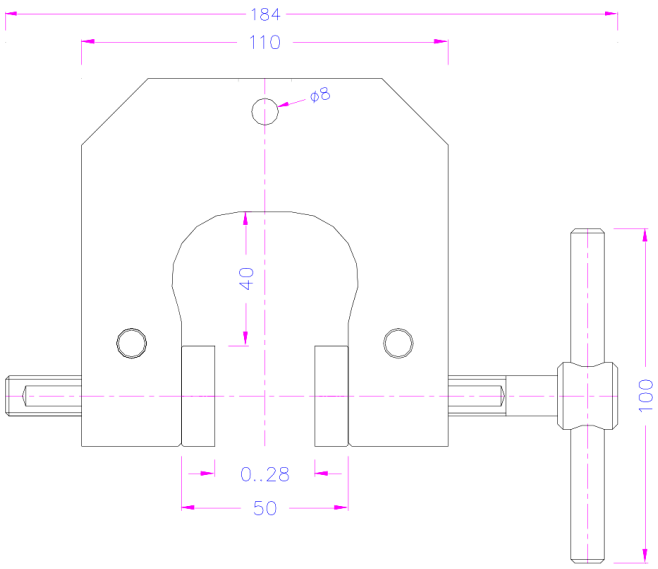

FIG. 2

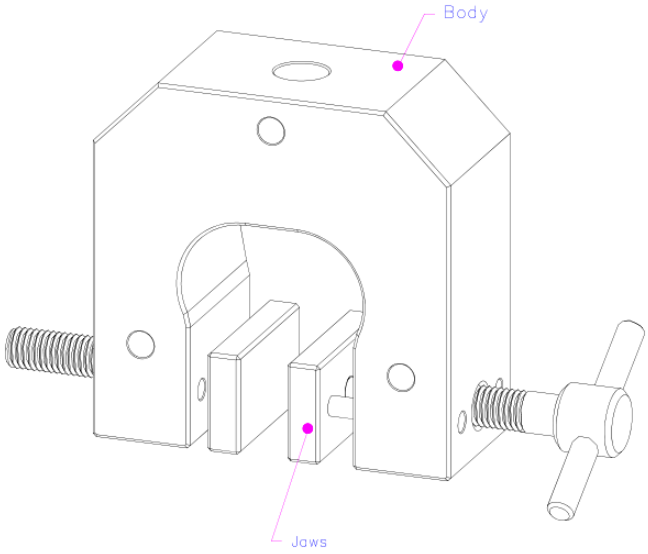

FIG. 3

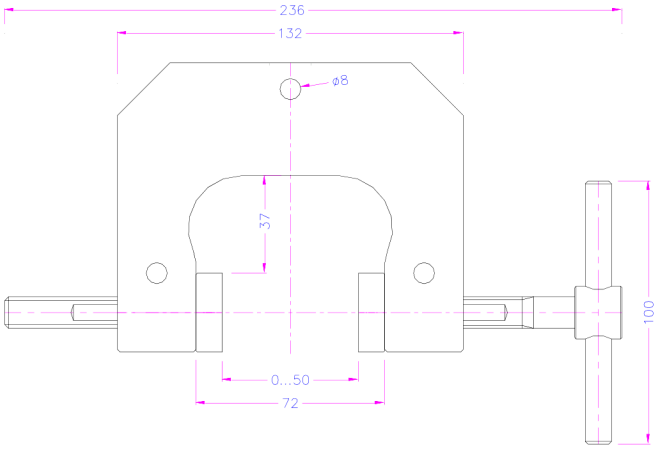

FIG. 4

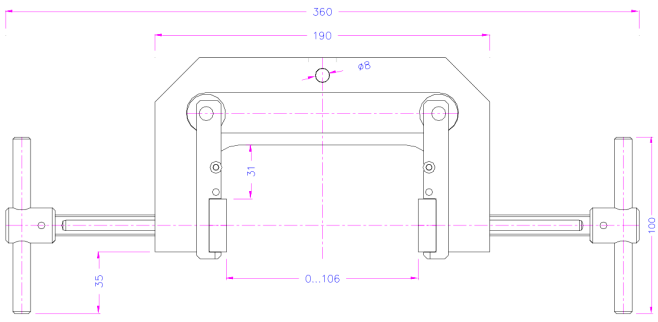

Dimensions in mm. Drawings are representative of the product family and may show optional versions or accessories; dimensions are for reference only and may change without notice. Certified dimensional drawings and 3D models are available on request.