STANDARDS TEST FIXTURE

Flatwise Tensile Bond Fixture EN 2243-4

Modular flatwise tensile fixtures for sandwich and bonded specimens to EN 2243-4 and ASTM C297



OVERVIEW

Modular fixture series for flatwise tensile strength and tensile adhesion tests according to EN 2243-4, ASTM C297, ASTM D3354, ASTM D1623B, EN 1607 and DIN 53292. The specimen is bonded to insert loading blocks held in single- or double-axis carriers and pulled apart. Larger samples from 100 × 100 mm use rigid plates on cardan joint adapters.

KEY FEATURES

- One carrier system covers six flatwise tensile standards
- Single-axis carriers for 20 kN or 50 kN
- Double-axis carrier for 10 kN with improved alignment
- Insert blocks from 25.4 × 25.4 mm to 100 × 100 mm
- Nickel-plated steel for -70 … +350 °C
- Plate version for samples up to 300 × 300 mm

TECHNICAL SPECIFICATIONS

Max. load	20 kN or 50 kN (single-axis), 10 kN (double-axis)
Test type	Flatwise tensile, tensile adhesion
Standards	EN 2243-4, ASTM C297, ASTM D3354, ASTM D1623B, EN 1607, DIN 53292
Insert block sizes	25.4, 50, 50.8, 76.2, 100 mm square
Coupling	Female clevis Ø 15.9, 20 or 31.8 mm; others via adapter
Material	Steel, nickel-plated
Temperature range	-70 … +350 °C (carriers); -70 … +180 °C (plate version)
Scope of supply	Carriers and inserts ordered separately, 1 pair each

AVAILABLE VERSIONS

Single-axis carrier, 20 kN	EN 2243-4; 15.9 mm or 20 mm clevis coupling
Single-axis carrier, 50 kN	EN 2243-4; 31.8 mm clevis coupling and larger
Double-axis carrier, 10 kN	ASTM C297, D1623B, D3354, EN 1607, DIN 53292
Insert blocks 25.4 x 25.4 mm	ASTM C297, ASTM D1623B
Insert blocks 50 x 50 mm	EN 2243-4, EN 1607, DIN 53292
Insert blocks 50.8 x 50.8 mm (2 × 2 in)	ASTM C297

APPLICATIONS

- Aerospace sandwich panels
- Honeycomb and foam cores
- Insulation board testing
- Coating and adhesive bonds

STANDARDS EN 2243-4, ASTM C297, ASTM D3354, ASTM D1623, EN 1607, DIN 53292

Ordering & customization: Specify the standard, insert block size, required capacity and the machine coupling; carriers and inserts are ordered separately.

Dimensional drawings
See page 2. Certified drawings and 3D models available on request.

Specifications are typical and may vary by configuration; confirm at time of quote. Custom versions, couplings and adapters available on request. Part ref. UGC-ST-540

Flatwise Tensile Bond Fixture EN 2243-4

DIMENSIONAL DRAWINGS

FIG. 1

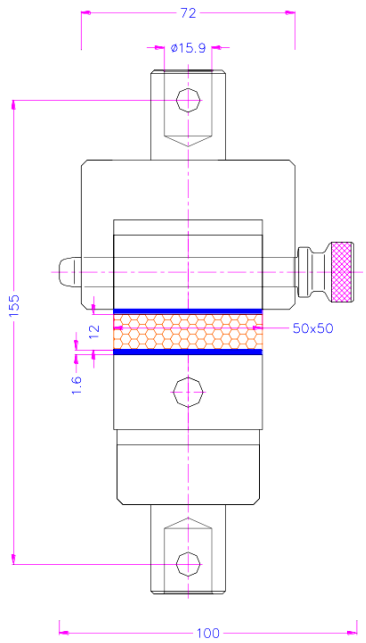

FIG. 2

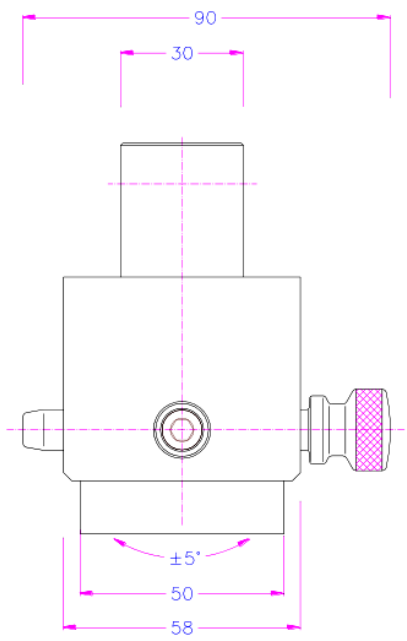

FIG. 3

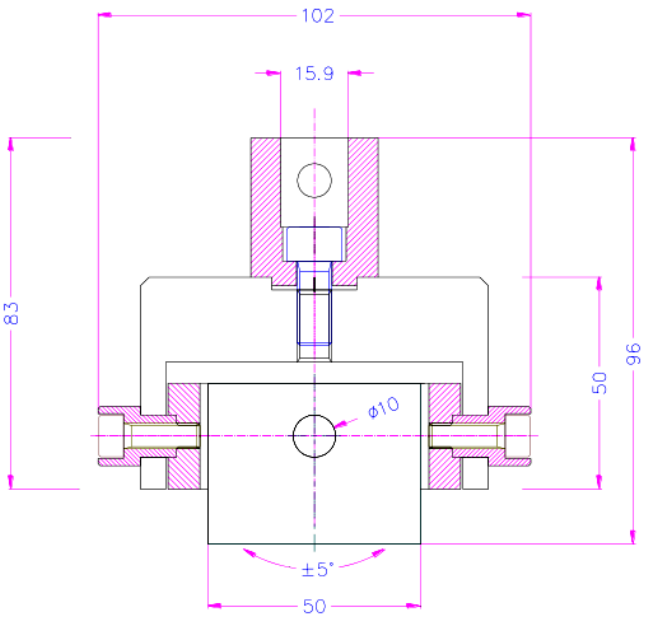

FIG. 4

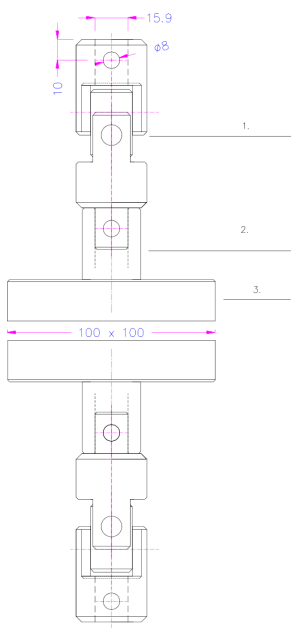

Dimensions in mm. Drawings are representative of the product family and may show optional versions or accessories; dimensions are for reference only and may change without notice. Certified dimensional drawings and 3D models are available on request.