UNIVERSAL GRIP CO.

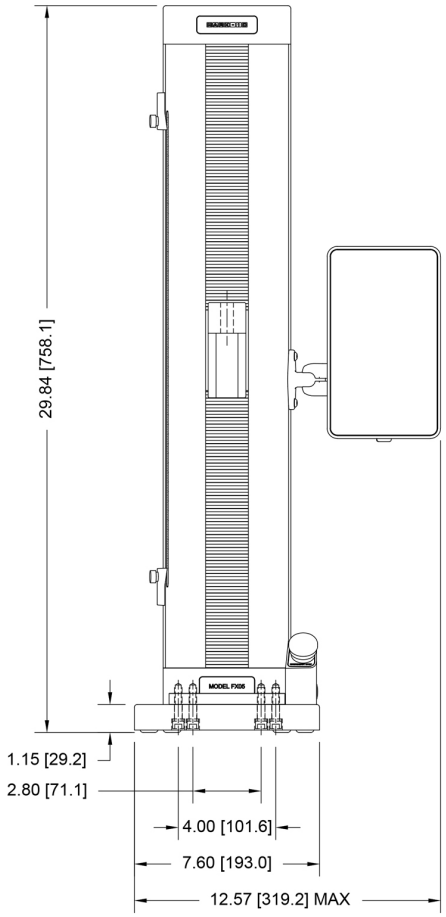

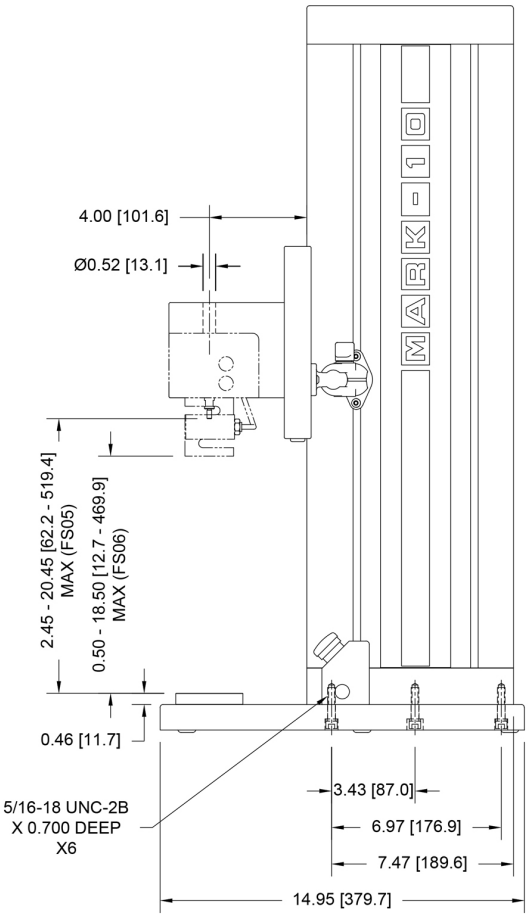

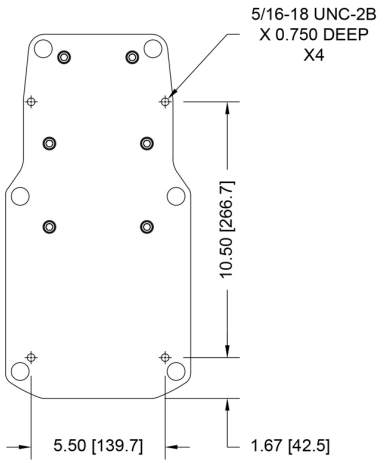

BENCH MOUNTING HOLES
BOTTOM VIEW

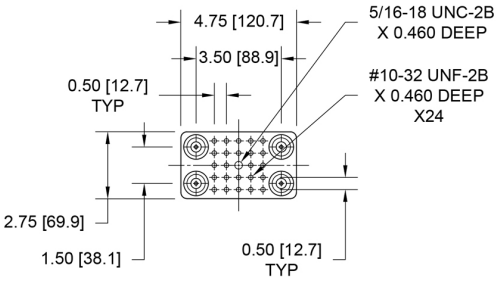

MOUNTING PLATE
TOP VIEW