STANDARDS TEST FIXTURE

Bitumen Sheet Crack Bridging Fixture EN 14224

Crack bridging test fixture for reinforced bitumen sheets to EN 14224

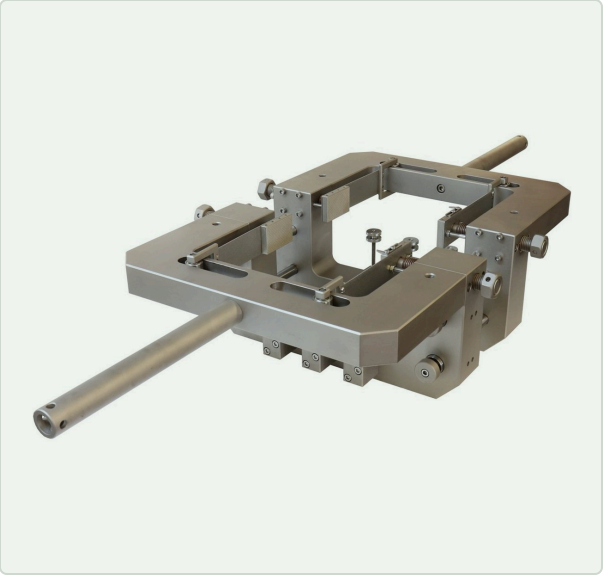

OVERVIEW

Test fixture for determining the crack bridging ability of reinforced bitumen sheets according to EN 14224. The specimen is clamped across two halves of a rectangular frame with knurled jaws; the testing machine pulls the halves apart along guide rods to open a simulated crack beneath the sheet. Opening range 10–85 mm, rated for 10 kN.

KEY FEATURES

- Designed for crack bridging tests according to EN 14224
- Two-part frame opens a simulated crack under the sheet
- Knurled clamping jaws hold the specimen securely
- Guide rods keep the frame halves parallel during opening
- Opening range 10–85 mm, rated for 10 kN
- Nickel-plated steel with standard 20 mm clevis coupling

TECHNICAL SPECIFICATIONS

Max. load	10 kN
Test type	Crack bridging (tensile)
Standard	EN 14224
Opening	10–85 mm
Specimen	Reinforced bitumen sheets
Coupling	Female clevis, Ø 20 mm pin
Material	Steel, nickel-plated
Temperature range	On request

APPLICATIONS

- Roofing membrane testing
- Waterproofing sheet qualification
- Bitumen product development
- Building materials laboratories

STANDARDS EN 14224

Ordering & customization: Specify specimen dimensions, test temperature (EN 14224 tests may be run cold) and the machine coupling.

Drawings available on request
Contact us for dimensional drawings or 3D models of this product.

Specifications are typical and may vary by configuration; confirm at time of quote. Custom versions, couplings and adapters available on request. Part ref. UGC-ST-280