STANDARDS TEST FIXTURE

Finch Wet Tensile Fixture ISO 12625-5

Finch device for wet tensile strength of paper and tissue to ISO 12625-5



OVERVIEW

Finch device for measuring the wet tensile strength of moist paper, tissue paper and tissue products according to ISO 12625-5, ISO 3781, TAPPI T456, ASTM D828 and ASTM D829. A strip is looped around a horizontal bar immersed in water in the container and its free ends are clamped in an upper grip, so the wetted loop is pulled to failure.

KEY FEATURES

- Designed for wet tensile tests to ISO 12625-5 and ISO 3781
- Also covers TAPPI T456, ASTM D828 and ASTM D829
- Stainless steel loading bar with aluminum base and water container
- Lightweight at 0.4 kg for accurate low-force readings
- Rated for loads up to 500 N
- Available with clevis coupling or sword adapter

TECHNICAL SPECIFICATIONS

Max. load	500 N
Test type	Wet tensile (Finch method)
Standards	ISO 12625-5, ISO 3781, TAPPI T456, ASTM D828, ASTM D829
Coupling	Female clevis, Ø 15.9 mm (5/8 in) pin or sword adapter
Material	Stainless steel; aluminum base and container
Temperature range	0 … +70 °C; other ranges on request
Weight	0.4 kg
Scope of supply	1 fixture; upper grip ordered separately

AVAILABLE VERSIONS

Clevis version	15.9 mm female clevis coupling; others on request
Sword adapter version	For machines with sword-type connection

APPLICATIONS

- Tissue and towel producers
- Wet-strength paper QC
- Hygiene product testing
- Paper testing laboratories

STANDARDS ISO 12625-5, ISO 3781, TAPPI T456, ASTM D828, ASTM D829

Ordering & customization: Specify the machine connection (clevis or sword) and add an upper grip, e.g. a small vise grip with rubber-coated jaws.

Dimensional drawings
See page 2. Certified drawings and 3D models available on request.

Specifications are typical and may vary by configuration; confirm at time of quote. Custom versions, couplings and adapters available on request. Part ref. UGC-ST-490

Finch Wet Tensile Fixture ISO 12625-5

DIMENSIONAL DRAWINGS

FIG. 1

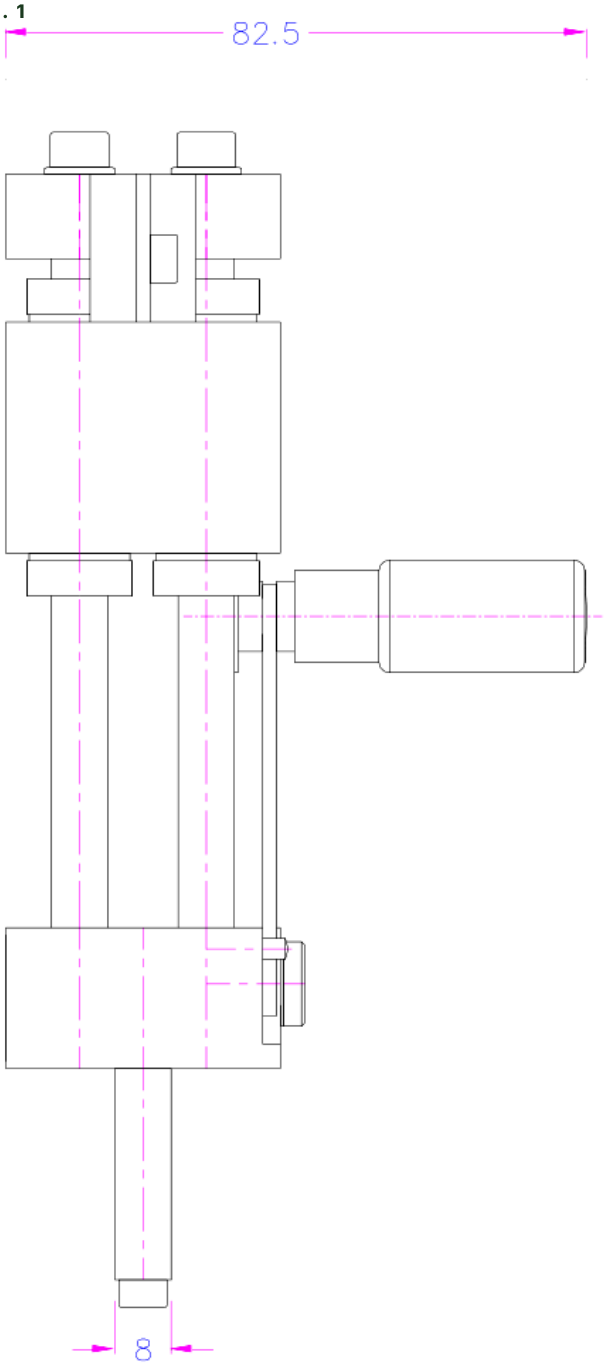

FIG. 2

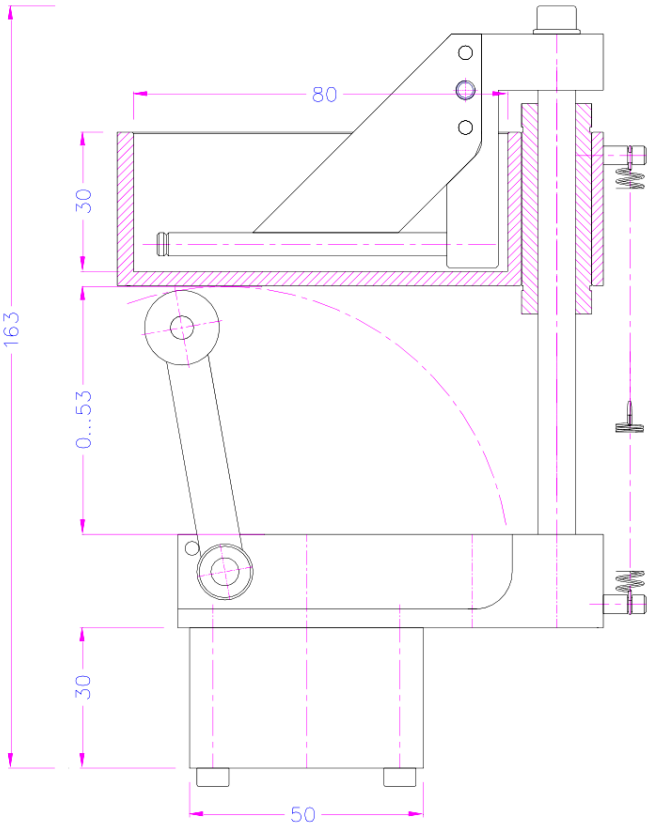

Dimensions in mm. Drawings are representative of the product family and may show optional versions or accessories; dimensions are for reference only and may change without notice. Certified dimensional drawings and 3D models are available on request.