STANDARDS TEST FIXTURE

Laminate Click Joint Strength Fixture

Fixture for tooth strength of click-locking joints in wood and laminate flooring



OVERVIEW

Fixture for testing the tooth strength of click-locking joint systems in wood laminate flooring. The panel edge is clamped in a small vise on an adjustable sliding carriage, while a stainless steel loading plate held in an upper screw grip engages the locking tooth. The testing machine loads the joint profile until the tooth fails. Accepts laminate samples 0–20 mm thick.

KEY FEATURES

- Designed for click-system locking tooth strength
- Accepts laminate and engineered wood samples 0–20 mm thick
- Lower vise on graduated sliding rail for precise positioning
- Stainless steel loading plate, 100 × 200 × 5 mm
- Upper screw-action grip holds the loading plate
- Anodized aluminum and stainless steel construction

TECHNICAL SPECIFICATIONS

Test type	Click joint tooth strength, tension
Sample thickness	0–20 mm
Loading plate	Stainless steel, 100 × 200 × 5 mm
Lower holder	Vise on adjustable graduated rail
Material	Aluminum, anodized; stainless steel
Max. load	On request
Coupling	Female clevis Ø 15.9 mm (5/8 in) or Ø 20 mm; others via adapter
Temperature range	Ambient

APPLICATIONS

- Laminate flooring
- Engineered wood flooring
- LVT click systems
- Flooring production QC

Ordering & customization: Specify sample thickness range, click profile type and machine coupling.

Dimensional drawings
See page 2. Certified drawings and 3D models available on request.

Specifications are typical and may vary by configuration; confirm at time of quote. Custom versions, couplings and adapters available on request. Part ref. UGC-ST-760

UGC-ST-760

Laminate Click Joint Strength Fixture

DIMENSIONAL DRAWINGS

FIG. 1

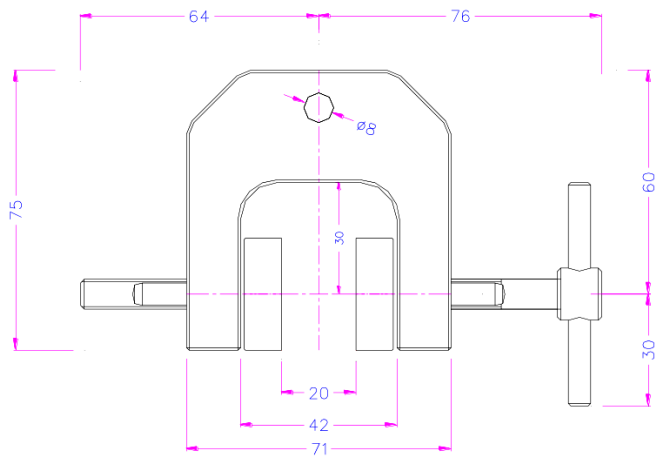

FIG. 2

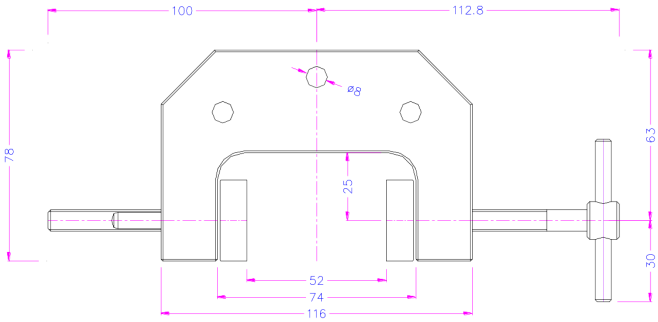

FIG. 3

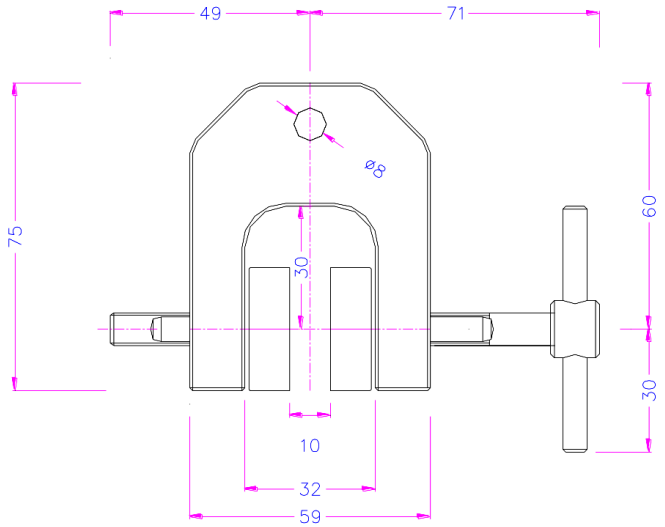

FIG. 4

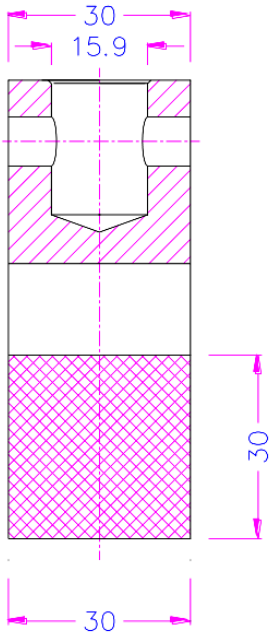

Dimensions in mm. Drawings are representative of the product family and may show optional versions or accessories; dimensions are for reference only and may change without notice. Certified dimensional drawings and 3D models are available on request.