STANDARDS TEST FIXTURE

Adhesion and Shear Test Fixture OST

Adhesion and layer shear fixtures for heat-shielding and structural plastics to OST

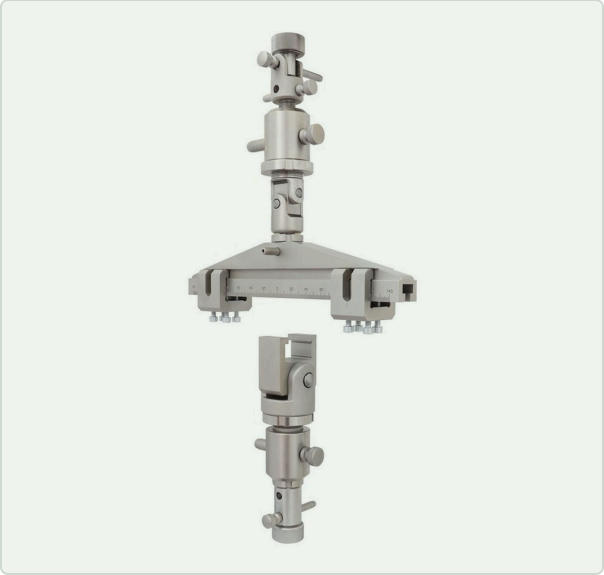

OVERVIEW

Fixtures for adhesion and layer shear testing of heat-shielding and structural plastic materials to the OST industry standards. The upper fixture has a beam with two adjustable supports on a graduated scale, hung from a universal joint for self-alignment, while the lower part holds the loading element in a slotted holder. Both fixtures are made of nickel-coated steel.

KEY FEATURES

- Adhesion test fixture built to OST 1-90016
- Layer shear test to OST 92-1472 Method B
- Adjustable supports on a graduated beam
- Universal joints provide self-alignment of the load train
- Slotted lower holder for quick specimen change
- Nickel-coated steel construction for corrosion resistance

TECHNICAL SPECIFICATIONS

Test type	Adhesion and layer shear
Support span	Adjustable on graduated scale
Alignment	Universal joints
Coupling	Male clevis, Ø 31.7 mm (1-1/4 in) pin hole
Material	Steel, nickel-coated
Max. load	On request
Temperature range	On request

AVAILABLE VERSIONS

Adhesion fixture	OST 1-90016
Layer shear fixture	OST 92-1472 Method B

APPLICATIONS

- Heat-shielding materials
- Structural plastics
- Laminates and coatings
- Aerospace materials

STANDARDS OST 1-90016, OST 92-1472

Ordering & customization: Specify which test (adhesion or layer shear), specimen dimensions and machine coupling.

Drawings available on request
Contact us for dimensional drawings or 3D models of this product.

Specifications are typical and may vary by configuration; confirm at time of quote. Custom versions, couplings and adapters available on request. Part ref. UGC-ST-020